PRODUCT SHEET

LA10348/F

Diesel Living with Lodes Fork Floor Lamp

SOURCE: https://www.davidvillagelighting.co.uk/product/Diesel-Living-with-Lodes-Fork-Floor-Lamp/21309

PRODUCT DESCRIPTION

Designer: Diesel Creative Team

Fork Floor Lamp by Diesel Living with Lodes

A part of the Diesel Living with Lodes Fork collection, the Fork floor lamp has an interesting and eye-catching aesthetic as a bent metal structure holds a linen cotton diffuser, reminiscent of a fork. The floor light is inspired by casual fashion and lifestyles, with the fabric lampshade resembling the canvas of a tent and having earthy colour tones.

The Fork floor light is available with either an **anthracite or ivory metal structure** paired with either a **grey or ivory diffuser.** The diffuser can also rotate around 360 degrees, so you can direct the light where needed. The shade also diffuses the light source, creating a warm ambience for your interior. Use in many spaces to create a natural and organic look, whether used in your lounge at home or used in your office at work.

PRODUCT SPECIFICATION

Light Source:	2 x max 25W E27 LED (excluded)
IP Code:	20
Dimming:	In line dimmer included on cable
Dimensions:	Ø29cm shade top 44.2cm shade height Ø33cm shade bottom 170.4cm height Ø40cm base 400cm cable length

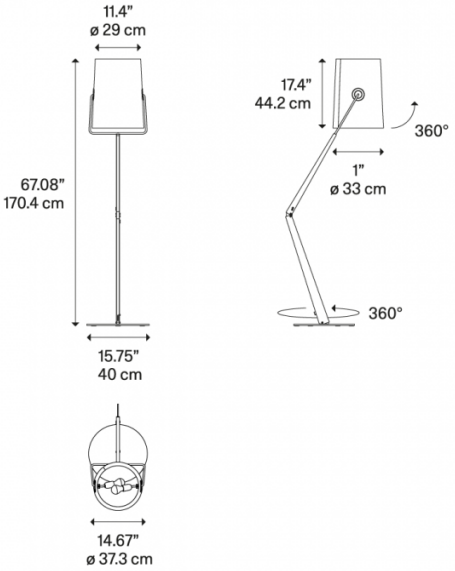

For all sales and technical enquiries, please contact:

+44 (0)114 263 4266

info@davidvillagelighting.co.uk

www.davidvillagelighting.co.uk