# PRODUCT SHEET

Resident

# Resident Bloom Floor Lamp

LA6025

SOURCE: https://www.davidvillagelighting.co.uk/product/Resident-Bloom-Floor-Lamp/20121

## PRODUCT DESCRIPTION

**Designer:** Tim Rundle

### Resident Bloom Floor Lamp

The Resident Bloom floor lamp, designed by Tim Rundle, draws inspiration from classic lanterns, resulting in a distinctive appearance with its elliptical glass shades and mix of light and materials. The frosted glass shade is equipped with a mesh centre that emits light downwards, enhancing its allure and brightly lighting up everything below it.

The Bloom floor lamp imitates the elegant motions of paper lanterns with transparency and light to produce a beautiful illuminated display. The shade is made up of two unique materials - a finely perforated mesh core and frosted blown glass - which join forces to generate a smooth and textured look on the inside. The matte black floor stand offers a bold contrast, further highlighting Bloom's personality, even when not in use.

## PRODUCT SPECIFICATION

| | |
|---|---|
| **Light Source:** | 1 X Max 5W, E27 LED (Excluded) |
| **IP Code:** | 20 |
| **Dimming:** | In line dimmer included on cable. |
| **Dimensions:** | Ø28cm<br>Height: 140cm<br>Cable: 300cm |

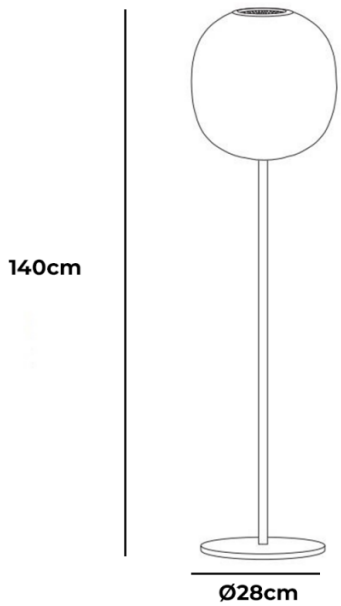


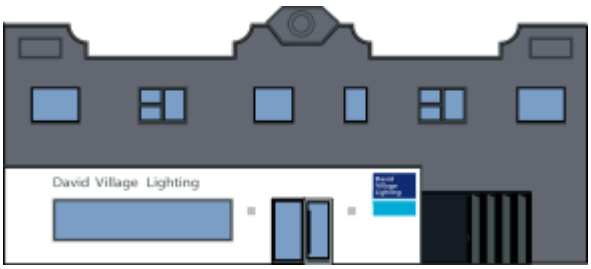


**For all sales and technical enquiries, please contact:**

+44 (0)114 263 4266

info@davidvillagelighting.co.uk

www.davidvillagelighting.co.uk